GREEN HCOE

Our new HCO series has now been upgraded to a green version. The 3M1 temperature range extends the area of use of this open self-service display case.
Maximum product pressure via increased shelf depth and 4 levels.

Highlights

- Grab & go: open customer side for fast and easy access
- Insulation glazing, refrigerant propane (R290) and night roller blind for best possible
- Optimised air flow and refrigeration technology to achieve temperature class 3M1
- Deep shelf for maximum filling

Temperature Range

Air
+2 °C

Product
3M1: + 1 °C
to + 5 °C

Accessories and custom options

- RAL powder coating
- Electric roller blind with remote control or app control
- PRO version for stand-alone solutions

Dimensions

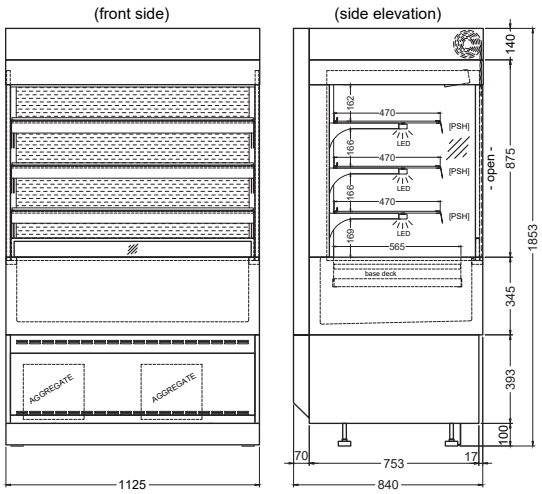

Technical data

Item	Item no.	Dimensions (W x D x H)	Connection	Refrigerant
GREEN HCOE-112-87-E R290 RG PRO SONDER	S0412510	1125 x 840 x 1853 mm	1229 Watt – 230V/50Hz	R290 (propane)